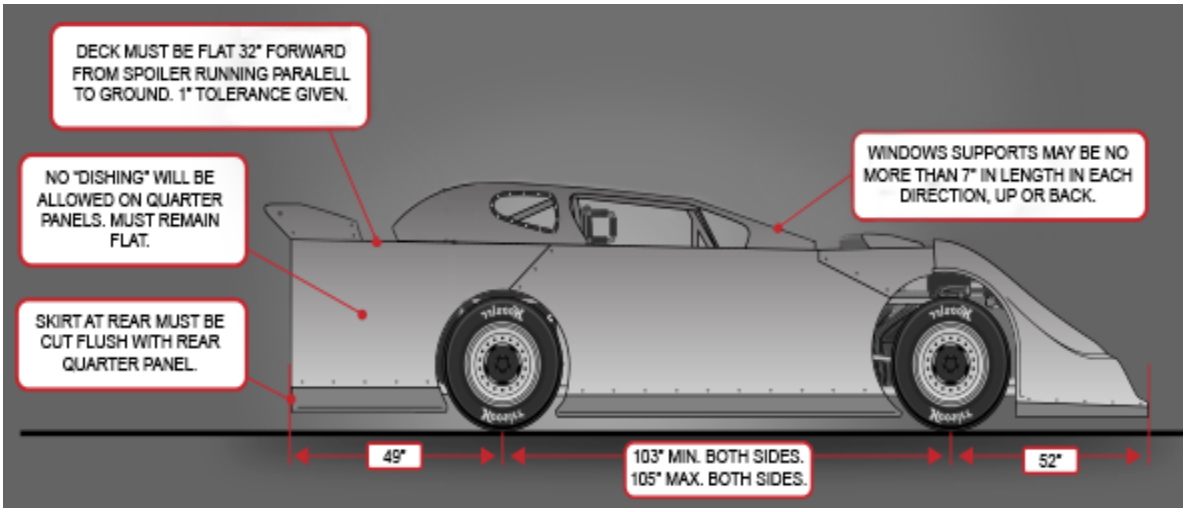
DECK MUST BE FLAT 32" FORWARD FROM SPOILER RUNNING PARALELL TO GROUND. 1" TOLERANCE GIVEN.
NO "DISHING" WILL BE ALLOWED ON QUARTER PANELS. MUST REMAIN FLAT.
SKIRT AT REAR MUST BE CUT FLUSH WITH REAR QUARTER PANEL.
WINDOWS SUPPORTS MAY BE NO MORE THAN 7" IN LENGTH IN EACH DIRECTION, UP OR BACK.
49"
103" MIN. BOTH SIDES.
105" MAX. BOTH SIDES.
52"

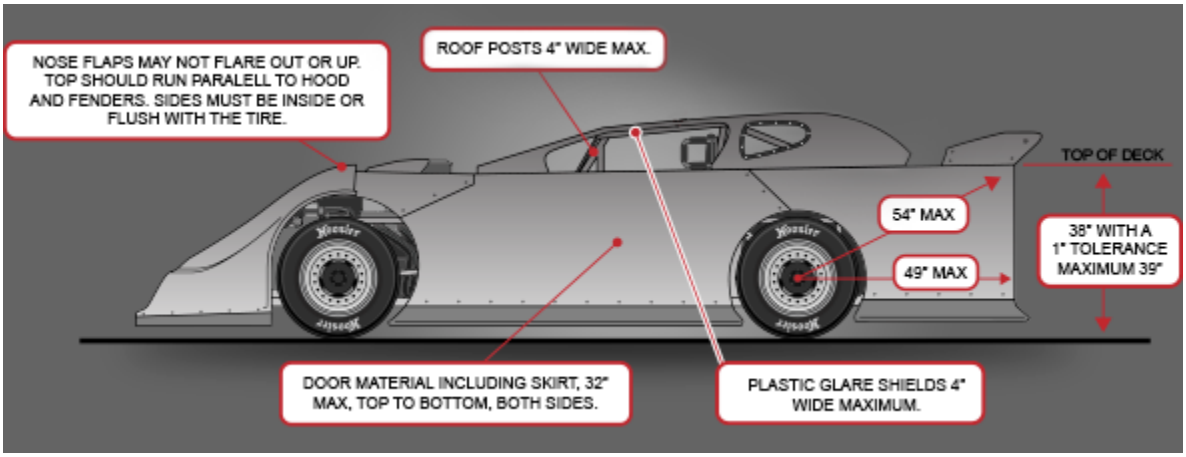
NOSE FLAPS MAY NOT FLARE OUT OR UP. TOP SHOULD RUN PARALELL TO HOOD AND FENDERS. SIDES MUST BE INSIDE OR FLUSH WITH THE TIRE.
ROOF POSTS 4" WIDE MAX.
TOP OF DECK
54" MAX
49" MAX
38" WITH A 1" TOLERANCE MAXIMUM 39"
DOOR MATERIAL INCLUDING SKIRT, 32" MAX, TOP TO BOTTOM, BOTH SIDES.
PLASTIC GLARE SHIELDS 4" WIDE MAXIMUM.

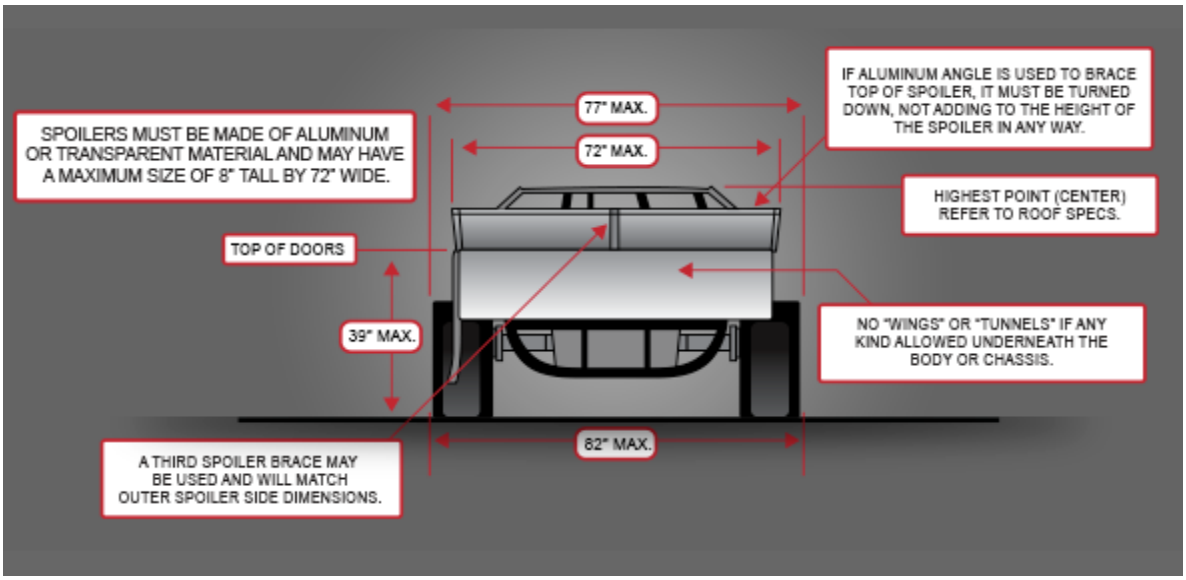
SPOILERS MUST BE MADE OF ALUMINUM OR TRANSPARENT MATERIAL AND MAY HAVE A MAXIMUM SIZE OF 8" TALL BY 72" WIDE.
77" MAX.
72" MAX.
IF ALUMINUM ANGLE IS USED TO BRACE TOP OF SPOILER, IT MUST BE TURNED DOWN, NOT ADDING TO THE HEIGHT OF THE SPOILER IN ANY WAY.
HIGHEST POINT (CENTER) REFER TO ROOF SPECS.
TOP OF DOORS
39" MAX.
NO "WINGS" OR "TUNNELS" IF ANY KIND ALLOWED UNDERNEATH THE BODY OR CHASSIS.
82" MAX.
A THIRD SPOILER BRACE MAY BE USED AND WILL MATCH OUTER SPOILER SIDE DIMENSIONS.

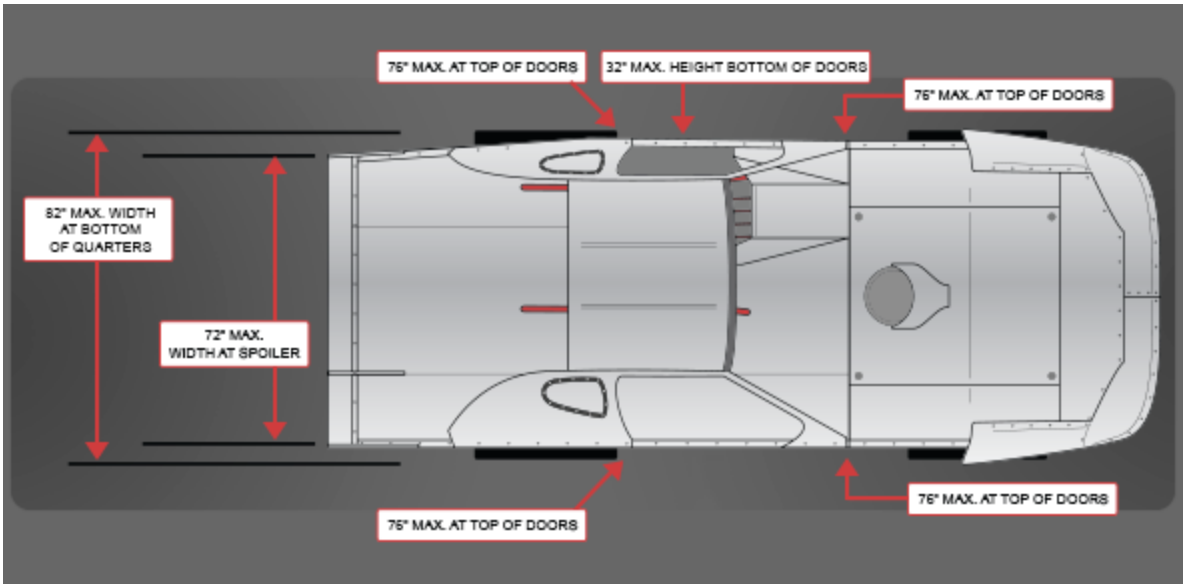

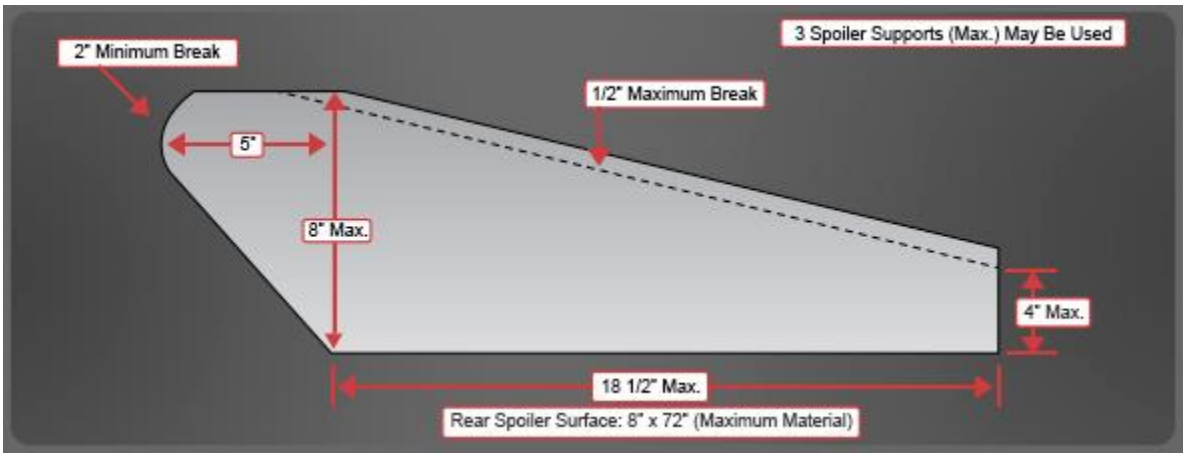

Track reserves the right to delete, change, or amend rules in the interest of competition.

2021 Dixie Speedway all rights reserved.